REVISION HISTORY			
Rev	DESCRIPTION	DATE	APPROVED

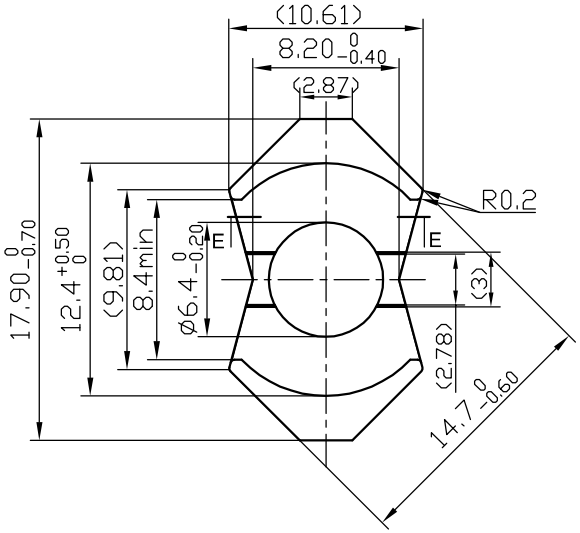

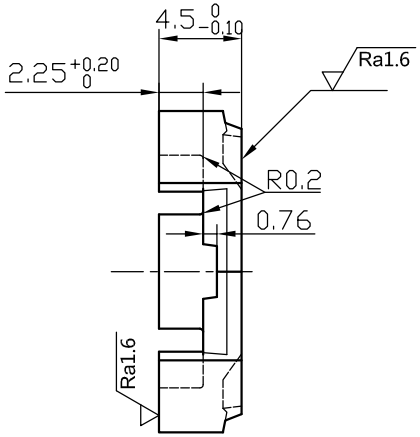

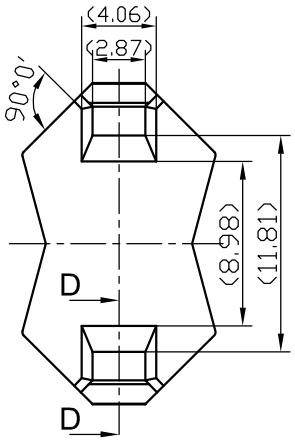

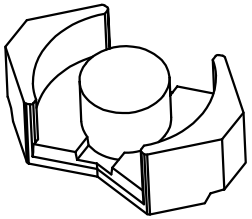

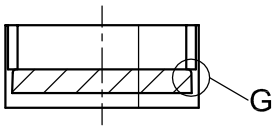

Section E-E

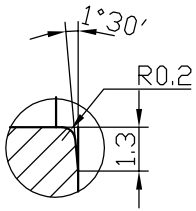

Detail G

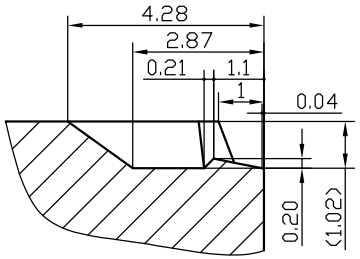

Section D-D

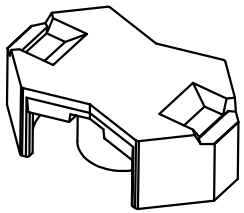

	Scale 2.5 : 1	Material	Customer Part number	
Unit: mm	Standard tolerances ±0.1		Product Name RM-6S-9	
Approved by Y.Higuchi	Created by H.Huang	Document type Production drawing	Rev 00	Drawing No. PY170707M11
Hitachi Metals (Hong kong) Ltd. Panyu Factory			Date of issue JUL 07 2017	Sheet 1/1